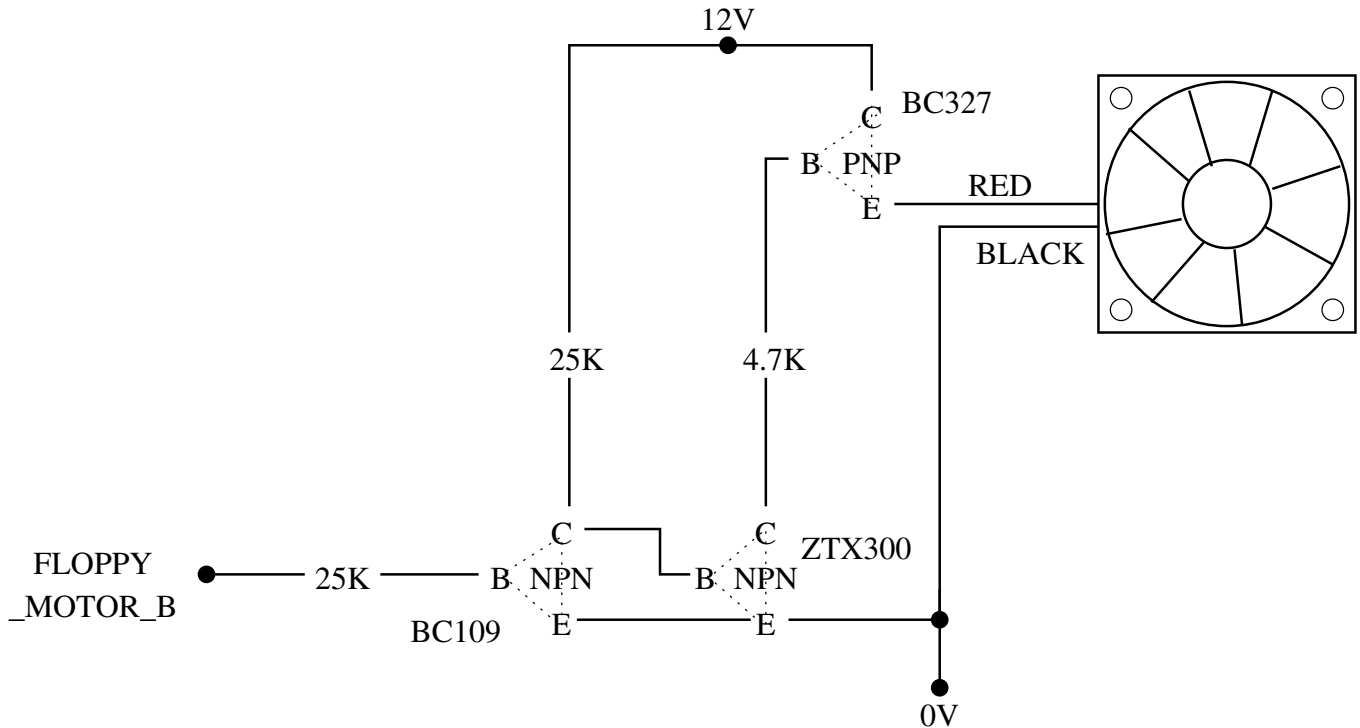
12V
BC327
C
B
PNP
E
RED
BLACK
25K
4.7K
C
C
ZTX300
FLOPPY
_MOTOR_B
25K
B
NPN
B
NPN
BC109
E
E
0V